JEHMLICH

DEAGGLOMERATOR [DA 220-D]

SCREENING MACHINE FOR DRY SOIL SAMPLES

INFO@JEHMLICH.INFO

WWW.JEHMLICH.INFO

JEHMLICH

Dry **soil samples** which have hardened and clumped because of transport and storage, are desagglomerated, loosened, **evenly screened and separated** from coarse impurities in one operation **by the Desagglomerator**. The soil sample is poured through a hopper into the working cylinder and desagglomerated and screened by the impact roller which rotates slowly over the screen on the working shaft. The size of the working gap can be changed by raising or lowering the fork lever to adjust the quality of the soil sample (loamy or sandy).

The soil sample will be deagglomerated evenly but not pulverized. This optimally prepares the sample for subsequent soil analysis for both environmental and agricultural purposes.

TECHNICAL SPECIFICATIONS

design	WITH CYCLONE	WITHOUT CYCLONE
capacity	60 samples / h	60 samples / h
connected load	0,6 kW; 3~ 400 V; 50 Hz	0,6 kW; 3~ 400 V; 50 Hz
dimensions (lxwxh)	**1090** x 740 x1300 mm (1750 mm with HMI)	**650** x 740 x1300 mm (1750 mm with HMI)
mass	400 kg	300 kg

The cyclone serves to relieve the suction system (material is collected in a separate dust container).

JEHMLICH

AVAILABLE ROTORS FOR OPTIMAL SAMPLE PREPARATION

LUMP BREAKER ROLLER

COMBINED ROTOR

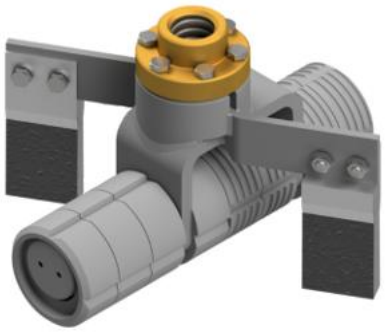

BRUSH ROTOR

3X LUMP BREAKER ROLLER

roller - roter combinations

FUNCTIONAL FEATURES

- Parameter variation: rotor contact pressure, rotor selection and speed, suction and sieve inserts
- Up to 50 storable recipes (4 as quick-select buttons) for setting rotor speed, grinding duration, suction duration and timing
- Inlet with removable cover grid (25 mm square holes) and splash guard for controlled sample feeding and, if necessary, manual pre-crushing on the machine table
- Sieve inserts with 2 mm hole diameter: round holes and 4-way divided Conidur® (other sieve perforations possible)
- 2 containers for separating the dissolved soil sample (d < 2 mm) and the soil skeleton (d > 2 mm)
- Suction required (provided by customer or included in delivery)

INSTALLATION

The deagglomerator is delivered ready for connection (16 A CEE plug) and ready for operation.

+49 35242 432 30

WWW.JEHMLICH.INFO

JEHMLICH

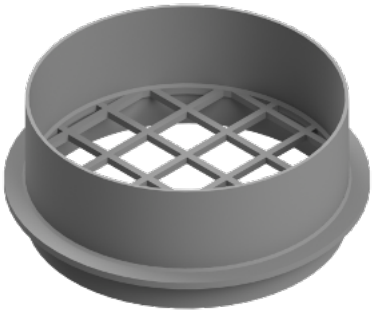

cover
(customisation upon customer request)

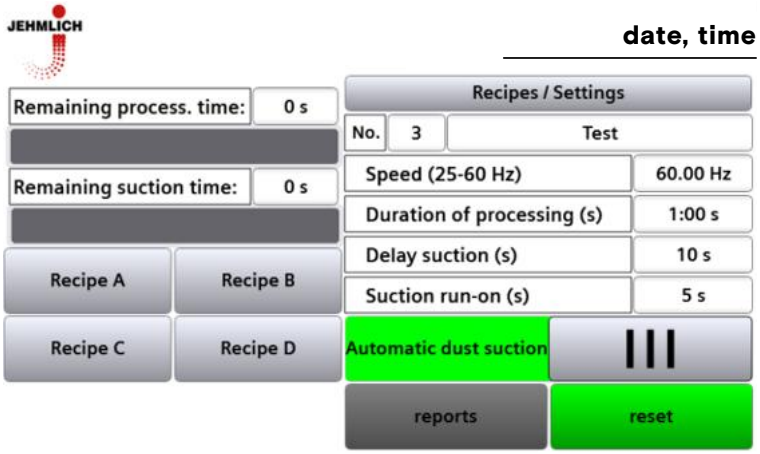

displayscreen with programmes

status: october 2025

INFO@JEHMLICH.INFO
WWW.JEHMLICH.INFO